BITX20 Transceiver

- *What is a BITX*
- *BITX History*
- *The Discussion Group*
- *BITX Today*
- *Future Directions*

ubuntu

What is a BITX

- A 6 watt SSB Transceiver for 20M designed by Farhan VU2ESE
- An International Discussion Group with approximately 2000 active members
- Homebrewed QRP Transceiver(s) for several bands
- Kit-built QRP Transceivers for several bands and Configurations
- Fun to build, and fun to operate, QRP SSB Single-band Transceiver

BITX Versions

- Original BITX20 (ugly-construction) 1Q2004
- Original BITX20 PCB from Far Circuits
- Dual-band BITX 20/40 (ugly construction)
- BITX20 Version-3 Kit
- BITX20A Kit
- BITX17A Kit
- MKARS80 Kit
- BITX20A Kits (modified for 12M, 30M-PSK, 40M, 80M, 160M, and 1750M
- Something in Thailand...?

ubuntu

BITX20A Block Diagram

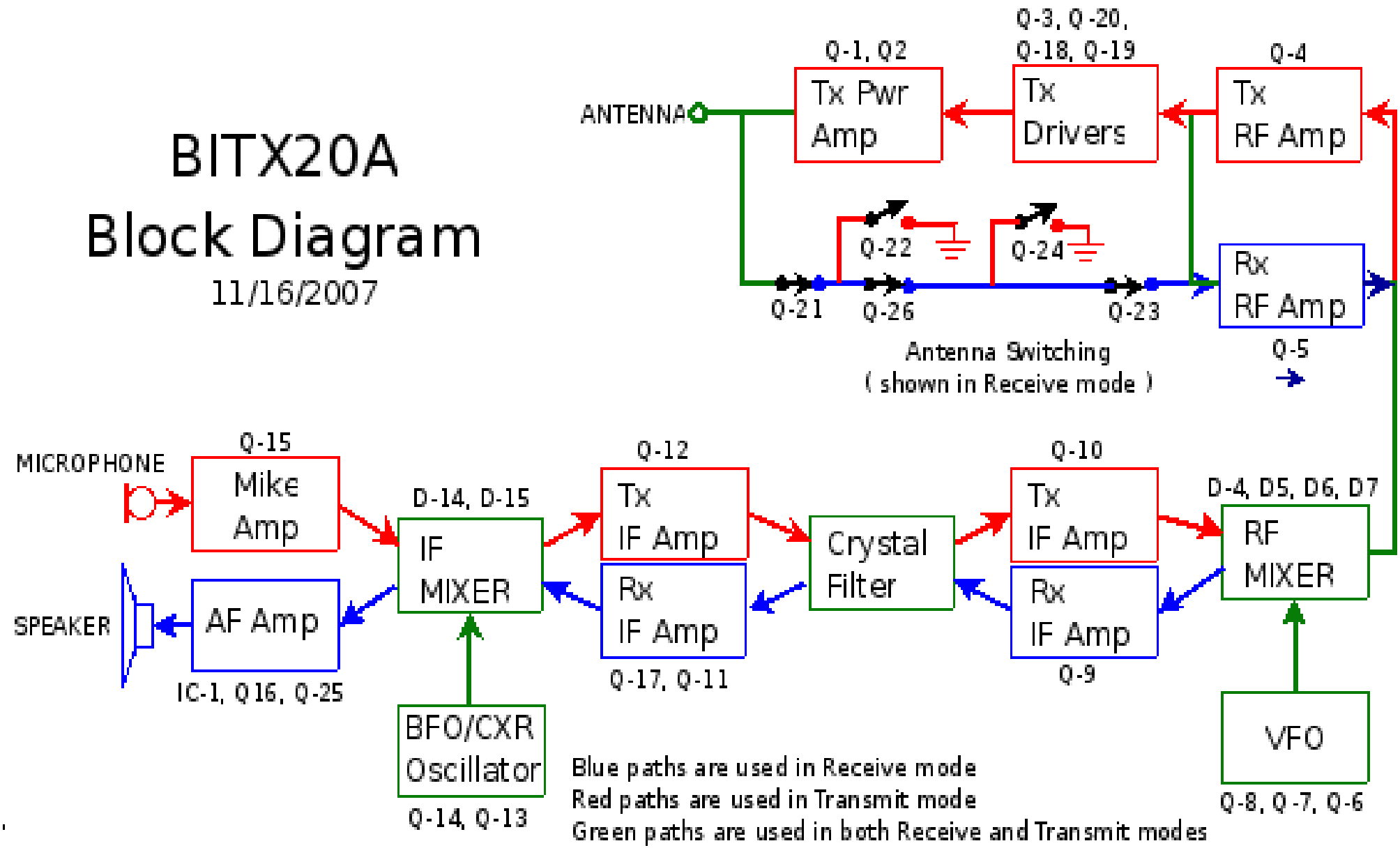

Farhan's BITX20

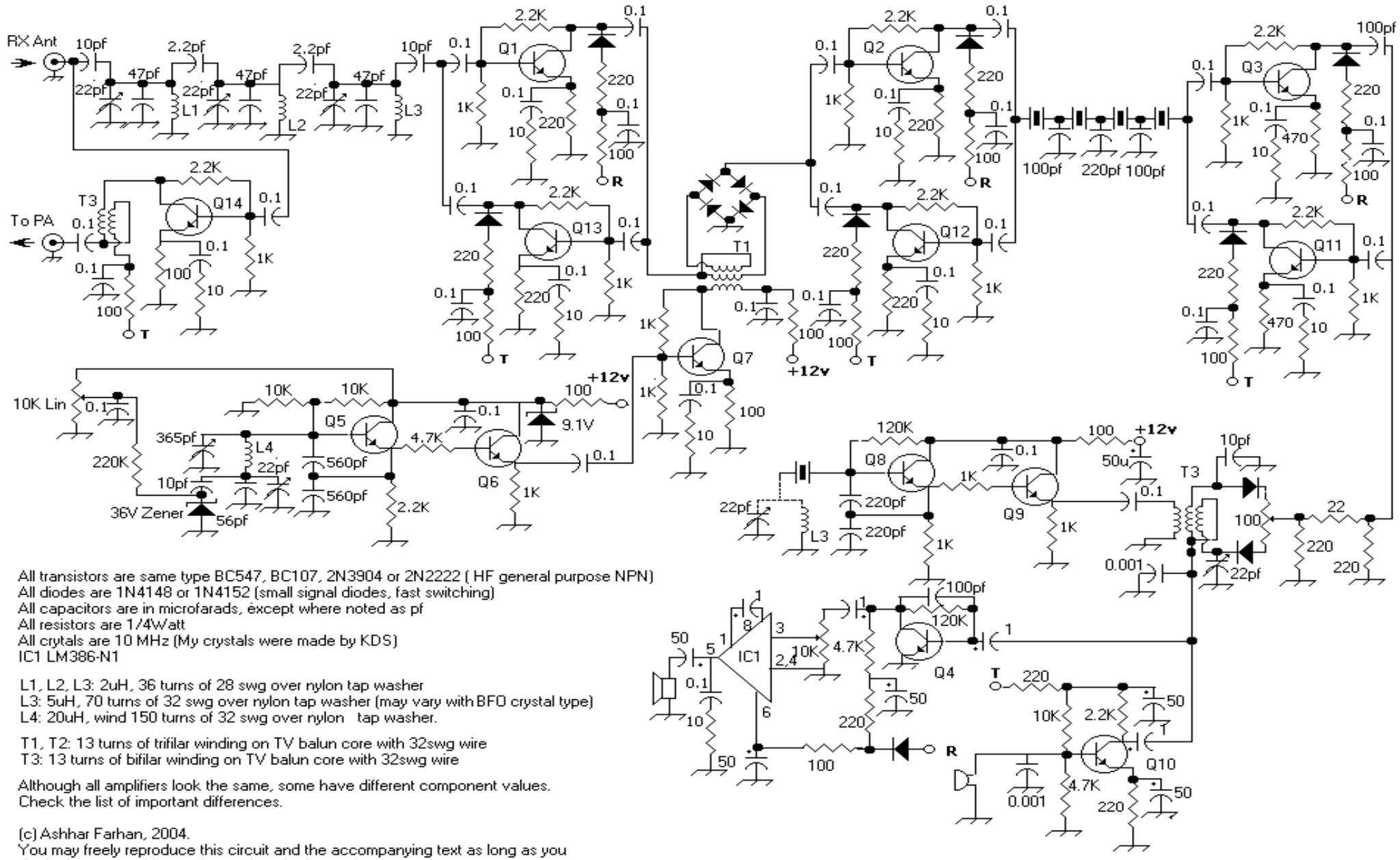

All transistors are same type BC547, BC107, 2N3904 or 2N2222 (HF general purpose NPN)
All diodes are 1N4148 or 1N4152 (small signal diodes, fast switching)
All capacitors are in microfarads, except where noted as pf
All resistors are 1/4Watt
All crytals are 10 MHz (My crystals were made by KDS)
IC1 LM386-N1

L1, L2, L3: 2uH, 36 turns of 28 swg over nylon tap washer
L3: 5uH, 70 turns of 32 swg over nylon tap washer (may vary with BFO crystal type)
L4: 20uH, wind 150 turns of 32 swg over nylon tap washer.

T1, T2: 13 turns of trifilar winding on TV balun core with 32swg wire
T3: 13 turns of bifilar winding on TV balun core with 32swg wire

Although all amplifiers look the same, some have different component values.
Check the list of important differences.

(c) Ashhar Farhan, 2004.
You may freely reproduce this circuit and the accompanying text as long as you don't change anything and reproduce both together.

Bi-directional Amplifiers

Vin/Rin = Vout/Rf (Eq.1)

Ie = Vin / Re = Vout / Rl (Eq. 2)

Vout / Vin = Rf / Rin = Rl / Re. (Eq. 3)

Rf / Rin = Rl / Re. (Eq 4)

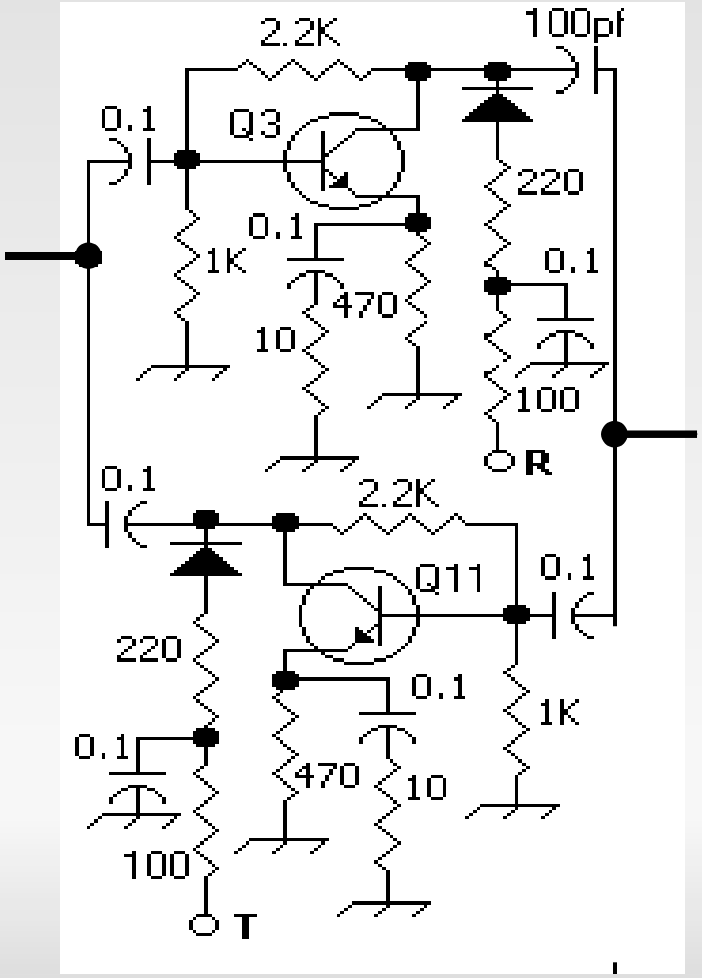

1) The voltage gain, and the input and output impedances are all related to resistor values and do not depend upon individual transistor characteristics. We only assume that the transistor gain is sufficiently high throughout the frequencies of our interest. The precise value of the transistor characteristics will only limit the upper frequency of usable bandwidth of such an amplifier. This is a useful property and it means that we can substitute one transistor for another.

2) The power gain is not a function of a particular transistor type. We use much lower gain than possible if the transistor was running flat out. But the gain is controlled at all frequencies for this amplifier. This means that this amplifier will be unconditionally stable (it won't exhibit unusual gain at difference frequencies).

3) You can restate the eq 3 as Rf * Re = Rl * Rin . That would mean that for a given fixed value of Rf and Re, the output impedance and input impedances are interdependent. Increasing one decreases the other and vice versa! For instance, in figure 1, Rf = 1000, Re = 10, if we have Rin of 50 ohms, the output impedance will be (1000 * 10)/50 = 200 ohms. Conversely, if we have an Rin of 200 ohms, the output impedance will be 50 ohms!

BITX20 History

- Farhan VU2ESE
  - BITX20 Design based on EMRFD topics (1Q2004)
  - Farhan's Web Site for BITX20 (http://www.phonestack.com/farhan)
- Hans G0UPL
  - Discussion Group (June 2004) (http://groups.yahoo.com/group/BITX20/)
  - Parts Kits
- Arv K7HKL
  - Discussion Group (July 2004)

ubuntu

Farhan VU2ESE

- Multi-Band BITX
- Single Band BITX
- Tsunami Interview on CNN
- DC Receiver
- Test Equipment
- http://www.phonestack.com/farhan/bitx.html

Hans G0UPL

- BITX20 Parts Kits
- BITX Discussion Group
- QRP, QRSS, QRO, Etc.
- Test Equipment
  - Minimalist Frequency Counters
  - Homebrew Spectrum Analyzer
- Huff & Puff VFO Stabilizer Designs
- Polyphase Receiver Design
- GPS Based Frequency Standard

HTTP://www.hanssummers.com

ubuntu

Arv K7HKL

- Early BITX20 Builder
- Early BITX40 Builder
- Early BITX-1750 Builder
- BITX Discussion Group
- BITX20A Prototype Kit Builder
- BITX17A Prototype Verification Builder
- Authored the BITX20A Kit and BITX17A Kit Assembly Manuals

  http://arvid.evans.googlepages.com/

  http://k7hkl.homelinux.net

ubuntu

Raj VU2ZAP

- Mentored VU hams building BITX20
- Helped hams worldwide resolve technical problems via contributions to the discussion group
- Provides very strong encouragement and support for ham radio in India, and worldwide

Rahul VU3WJM

- Provided help via the discussion group in resolving technical problems
- Designer of the BITX20 Version-3 Kits

Early BITX20 Transceivers

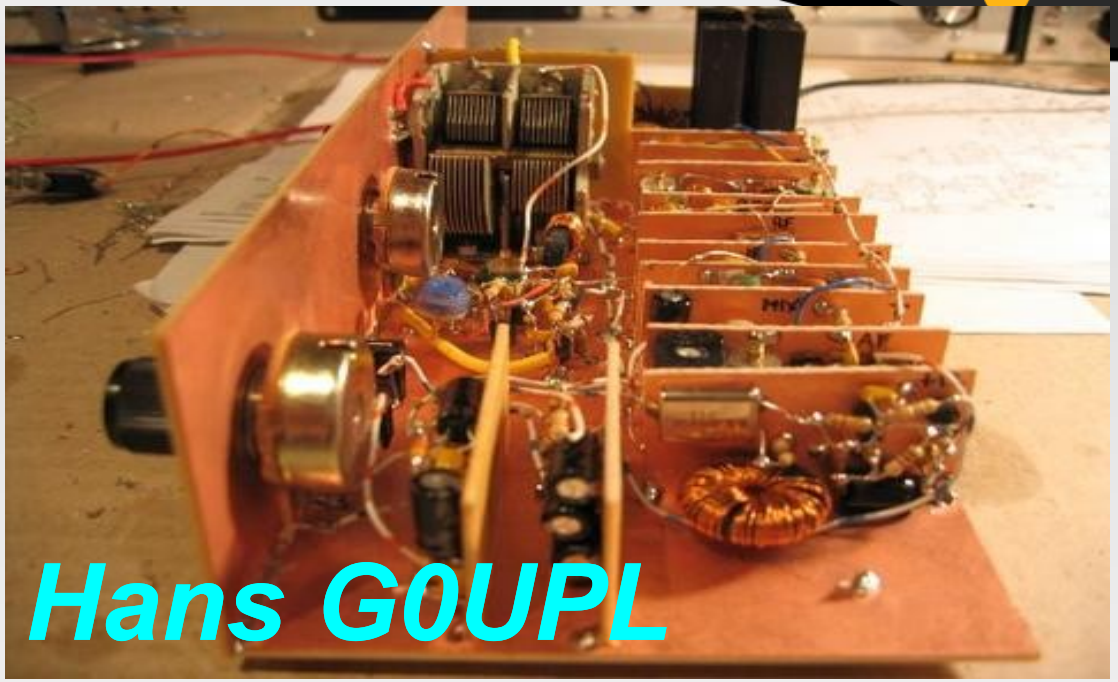

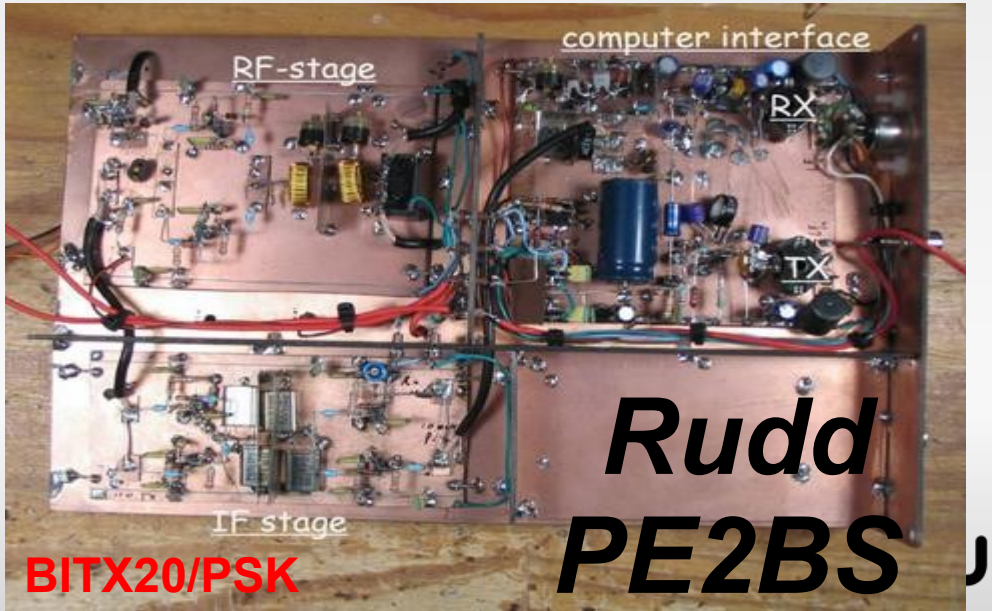

Sunil VU3SUA

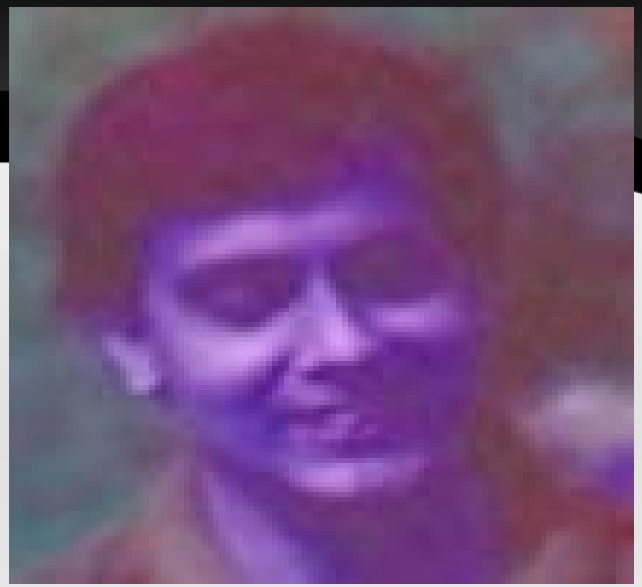

- BITX20 Version-3
  - PCB & Coils Partial Kits
  - BITX Ver-3 Full Kits
  - Counter Kit
  - Case Kit

http://www.cqbitx.blogspot.com/

ubuntu

Doug KI6DS

- www.qrpkits.com
- Funded BITX20A Kit prototyping & testing
- BITX20A Kit
- Digital Dial (Steve KD1JV)
- BITX17A Kit (Nigel G0EBQ)
- BITX Case Kit (Ken WA4MNT)
- NORCAL FCC-1/2 DDS Kit

Dan N7VE

- Tayloe Detector
- NORCAL NC-2030
- Tayloe SWR Bridge
- BITX20A Kit Design
  - Push-Pull RF PA
  - Improved Audio
  - FCC Compliance
  - PCB Layout

Jim K8IQY

- NORCAL 2N2-xx
- 2N2/6 No-tune Xvtr
- SW-30 CW 30M Xcvr
- IOWA 10M CW Xcvr
- BITX20A Kit Prototype Build & Testing
  - Varactor tuned VFO (no air capacitors)
  - RF Bandpass Filter Rework

- http://www.k8iqy.com/

ubuntu

Significant Contributions

- ***Martien PE1BWI*** - RF PA Stabilization Modification
- ***Chris PA2CRX*** – Modification to keep RF out of audio stages
- ***Wes W7ZOI*** – EMRFD & Bi-directional Amplifiers
- ***Leonard KC0WOX*** – How-To Videos, BITX V-3 Assembly Manual, Fixing Inoperative BITXs
- ***Nigel G0OEP*** – BITX17A Conversion

BITX20 Discussion Group

http://groups.yahoo.com/group/BITX20/

- Over 2000 Active Members Worldwide
- Adding About 6 New Members Per Week
- 8000 Messages Posted
- Tight Focus on BITX and BITX-related Issues
- We Have No Idea How Many BITX Transceivers Have Been Built
- Hams Helping Hams

ubuntu

BITX Today

- Many Ugly-Construction & homebrewed PCB BITXs have been built, and more continue to be built
- 4 Kit Vendors
  - BITX20A, BITX17A, Chassis & Counter Kits
    Doug KI6DS - http://www.qrpkits.com
  - BITX20 Ver-3, Chassis & Counter Kits
    Sunil VU3SUA - www.cqbitx.blogspot.com/
  - MKARS-80 Kit, Chassis Kit
    www.radio-kits.co.uk/
  - Original BITX20 Bare PCB
    www.farcircuits.net

Some BITX's

ubuntu

More BITX's

ubuntu

BITX Tomorrow...

- New Versions & New Modifications
- SDR Computer Control & Computer Interface
- Linear Amps For Higher Power Output.
- SB & CW Versions, With Adjustable Bandwidth
- Multi-Band Versions
- AVC, AGC & VOX Modifications
- ICs Replacing Discrete Components
- A BIPH, or Phasing BITX Is Being Designed
-

BIPH Phasing Transceiver

- Uses Mostly BITX Circuitry
- Direct-Conversion Layout
- Single-Band, With Band Conversion Information
- QRP Power Levels (Target = 10 Watts)
- Passive Polyphase AF Phase Shifting
- LC or -3db Hybrid Type RF Phase Shifters...?
- Huff & Puff Stabilized VFO
- Digital Dial (AVR Microprocessor & LCD)
- Timetable...*When It Is Ready*...

ubuntu

Phasing Transceiver Design Issues

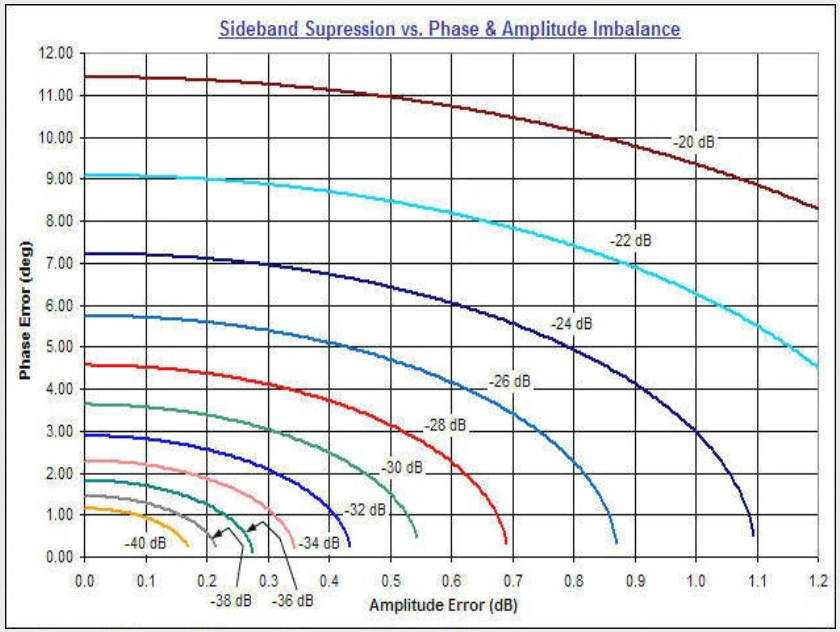

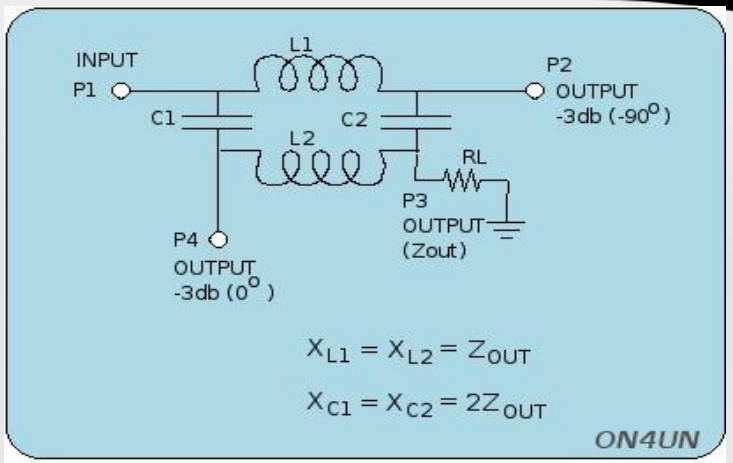

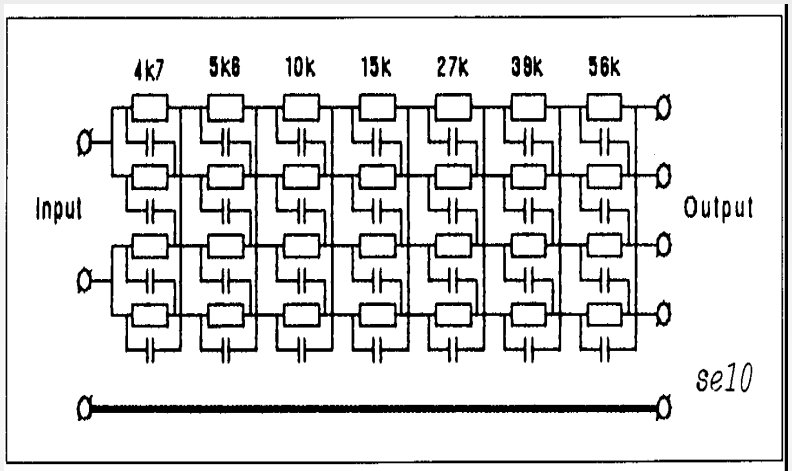
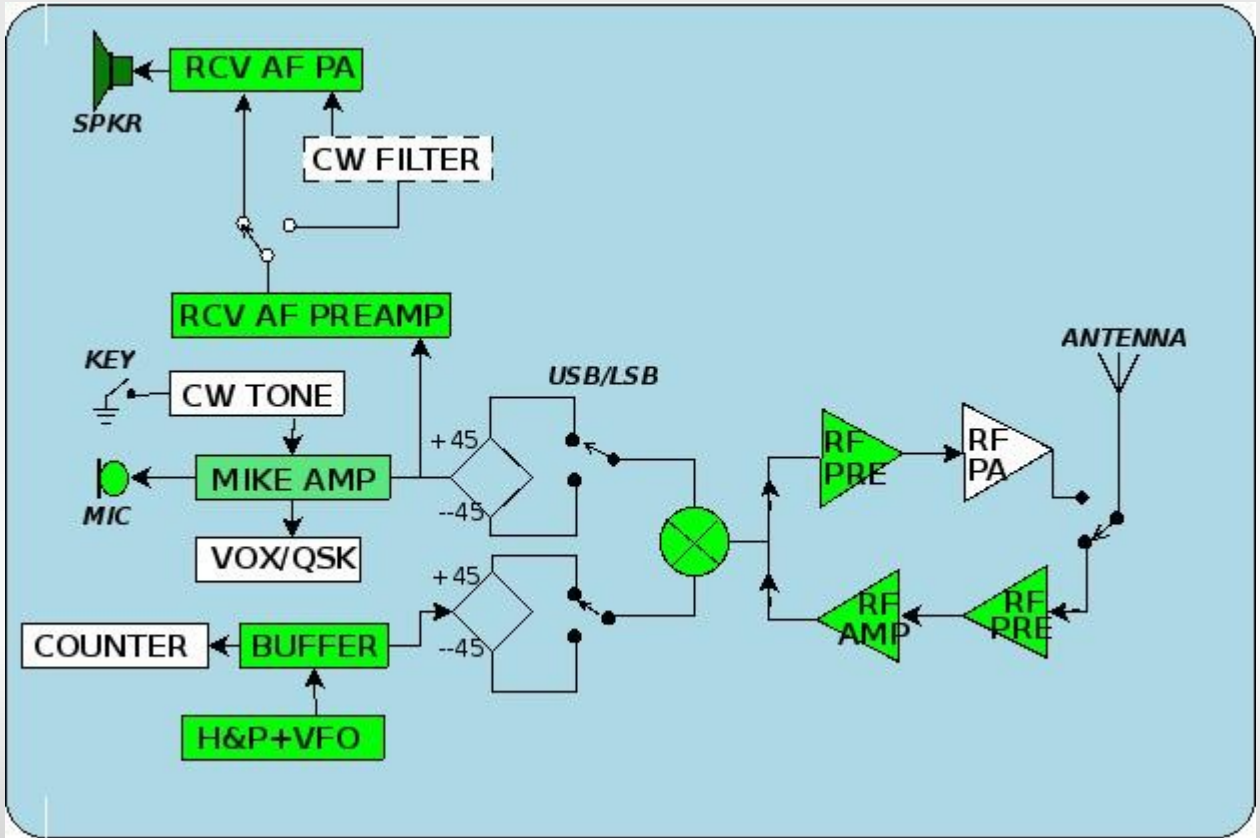
Fig. 10. Door PEoPIM ontworpen polyfase netwerk. Het maakt een zijbandonderdrukking mogelijk van minimaal 65 dB tussen 270 en 3600 Hz. Dit onder de aanname dat andere delen van de schakeling geen vermindering van de zijbanddemping veroorzaken.